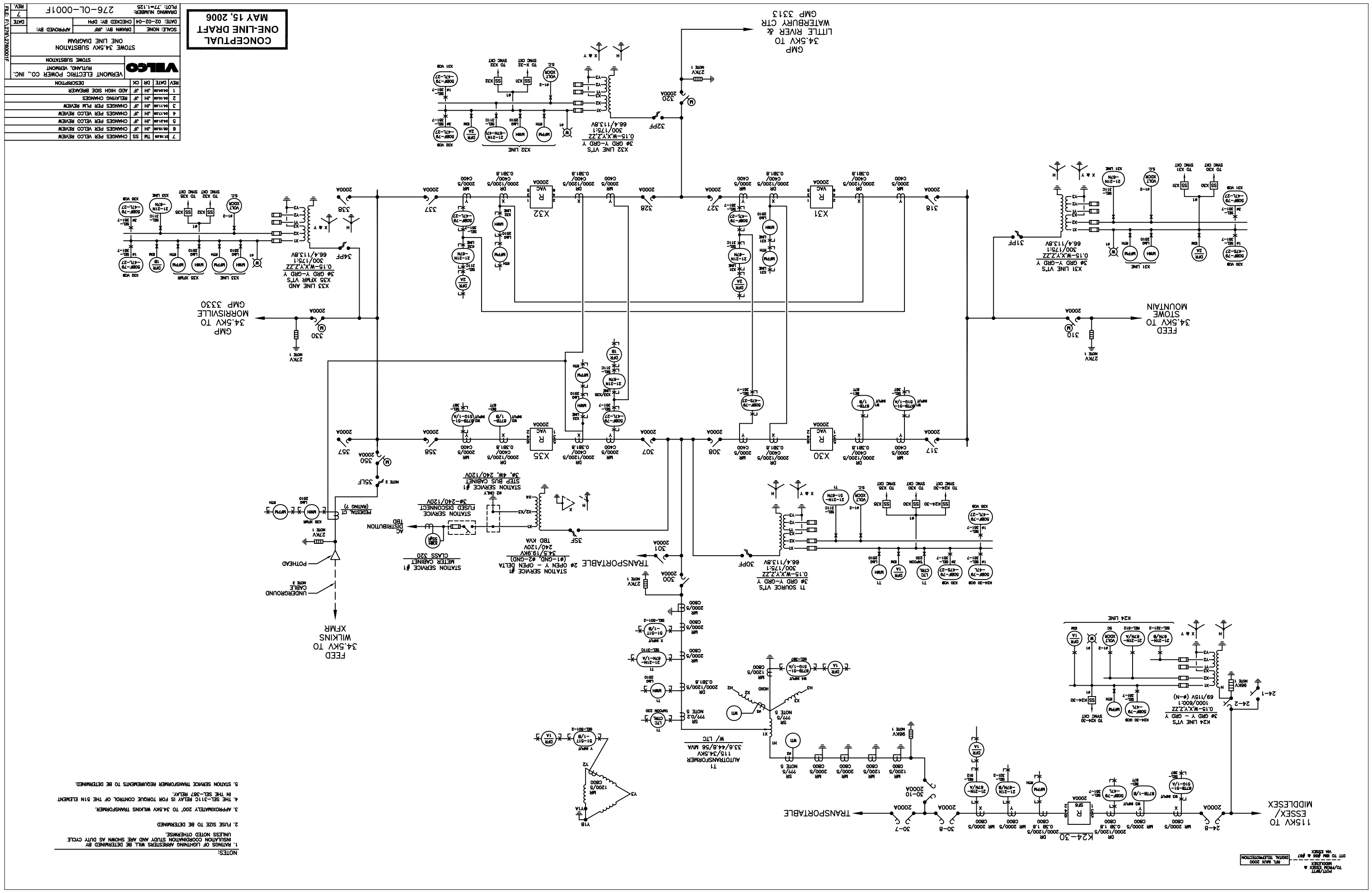
CONCEPTUAL
ONE-LINE DRAFT
MAY 15, 2006
VELCO
VERMONT ELECTRIC POWER CO., INC.
RUTLAND, VERMONT
STOWE SUBSTATION
STOWE 34.5kV SUBSTATION
ONE LINE DIAGRAM
SCALE: NONE
DRAWN BY: JRF
APPROVED BY:
DATE 02-02-04
CHECKED BY: DPH
DRAWING NUMBER
276-OL-0001F
PLOT: 276-1.125
REV.
DATE
REV DATE DR CK DESCRIPTION
1 06/06/06 JH JF ADD HIGH SIDE BREAKER
2 06/10/06 JH JF RELAYING CHANGES
3 06/11/06 JH JF CHANGES PER PLM REVIEW
4 06/17/06 JH JF CHANGES PER VELCO REVIEW
5 06/21/06 JH JF CHANGES PER VELCO REVIEW
6 06/16/06 JH JF CHANGES PER VELCO REVIEW
7 07/06/06 TM SS CHANGES PER VELCO REVIEW
CONCEPTUAL
ONE-LINE DRAFT
MAY 15, 2006
GMP
34.5kV TO
LITTLE RIVER &
WATERBURY CTR
GMP 3313
FEED
34.5kV TO
STOWE
MOUNTAIN
GMP
34.5kV TO
MORRISVILLE
GMP 3330
FEED
34.5kV TO
WILKINS
XFMR
115kV TO
ESSEX/
MIDDLESEX
TRANSPORTABLE
X31 LINE VT'S
3ø GRD Y-GRD Y
0.15-W,X,Y,Z,ZZ
300/175:1
66.4/113.8V
X32 LINE VT'S
3ø GRD Y-GRD Y
0.15-W,X,Y,Z,ZZ
300/175:1
66.4/113.8V
X33 LINE AND
X35 XFMR VT'S
3ø GRD Y-GRD Y
0.15-W,X,Y,Z,ZZ
300/175:1
66.4/113.8V
T1 SOURCE VT'S
3ø GRD Y-GRD Y
0.15-W,X,Y,Z,ZZ
300/175:1
66.4/113.8V
K24 LINE VT'S
3ø GRD Y - GRD Y
0.15-W,X,Y,Z,ZZ
1000/600:1
69/115V (ø-N)
K24-30
K24-2
K24-1
K24 LINE
T1
AUTOTRANSFORMER
115/34.5kV
33.6/44.8/56 MVA
W/ LTC
STATION SERVICE #1
2ø OPEN Y - OPEN DELTA
(ø1-GND, ø2-GND)
34.5/19.9kV
240/120V
TBD KVA
STATION SERVICE #1
METER CABINET
CLASS 320
STATION SERVICE
FUSED DISCONNECT
2ø-240/120V
STATION SERVICE #1
STEP BUS CABINET
3ø, 4W, 240/120V
AC
DISTRIBUTION
TBD
PEDESTAL GT
(RATING ?)
UNDERGROUND
CABLE
NOTE 1
POTHEAD
NOTES:
1. RATINGS OF LIGHTNING ARRESTERS WILL BE DETERMINED BY INSULATION COORDINATION STUDY AND ARE SHOWN AS DUTY CYCLE UNLESS NOTED OTHERWISE.
2. FUSE SIZE TO BE DETERMINED
3. APPROXIMATELY 200' TO 34.5kV WLKINS TRANSFORMER.
4. THE SEL-311C RELAY IS FOR TORQUE CONTROL OF THE 51N ELEMENT IN THE SEL-387 RELAY.
5. STATION SERVICE TRANSFORMER REQUIREMENTS TO BE DETERMINED.
POTT/DETT
TO/FROM ESSEX &
MIDDLESEX
DTT TO RM 2015 & 2017
RFL MARK 3000
(DIGITAL TELEPROTECTION)
VA ESSEX